Progress towards mass measurements on single singly charged heavy and superheavy ions

25th of June 2007

Jens Ketelaer

Outline:

- Challenges
- Motivation
- Image current detection system
- Experimental setup
- Outlook and Summary

Challenges

We want to perform mass measurements on **rarely produced** heavy nuclides. (~1 particle per minute)

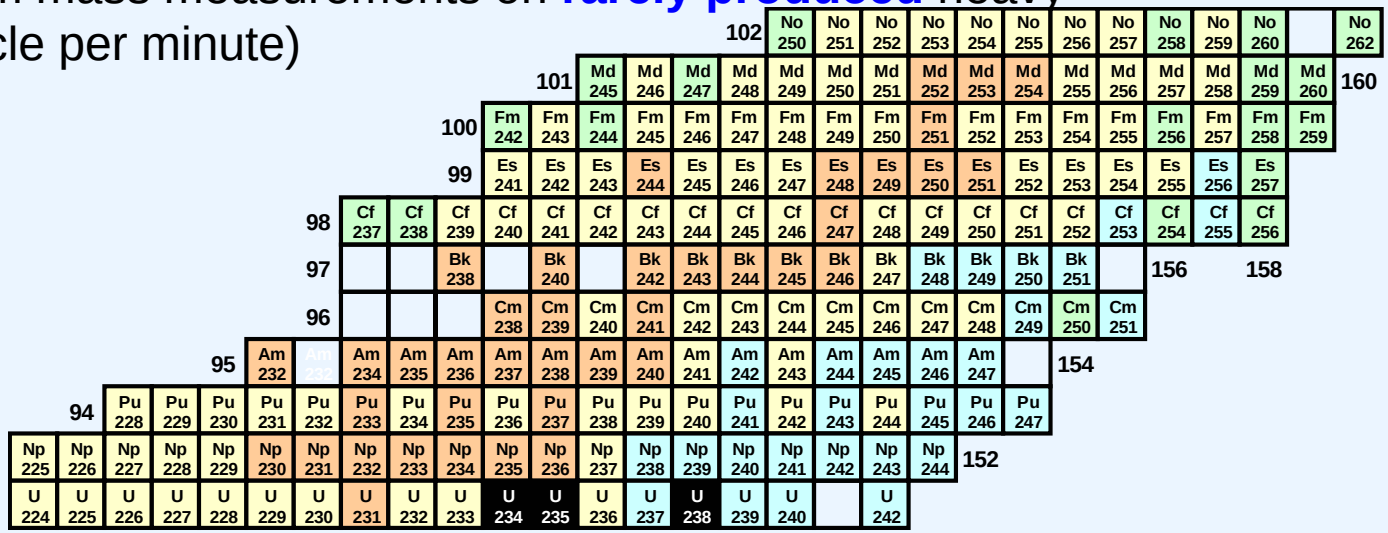

→ Need for

- a non-destructive detection technique

  long half-lives enable repeated measurement cycles with the same particle (statistics)

- single-particle sensitivity

  well-known non-destructive techniques in mass spectrometry are using several thousands of particles

- a low-noise environment

  single-particle signals are in the order of a few hundred fA

Motivation: Applications in nuclear astrophysics

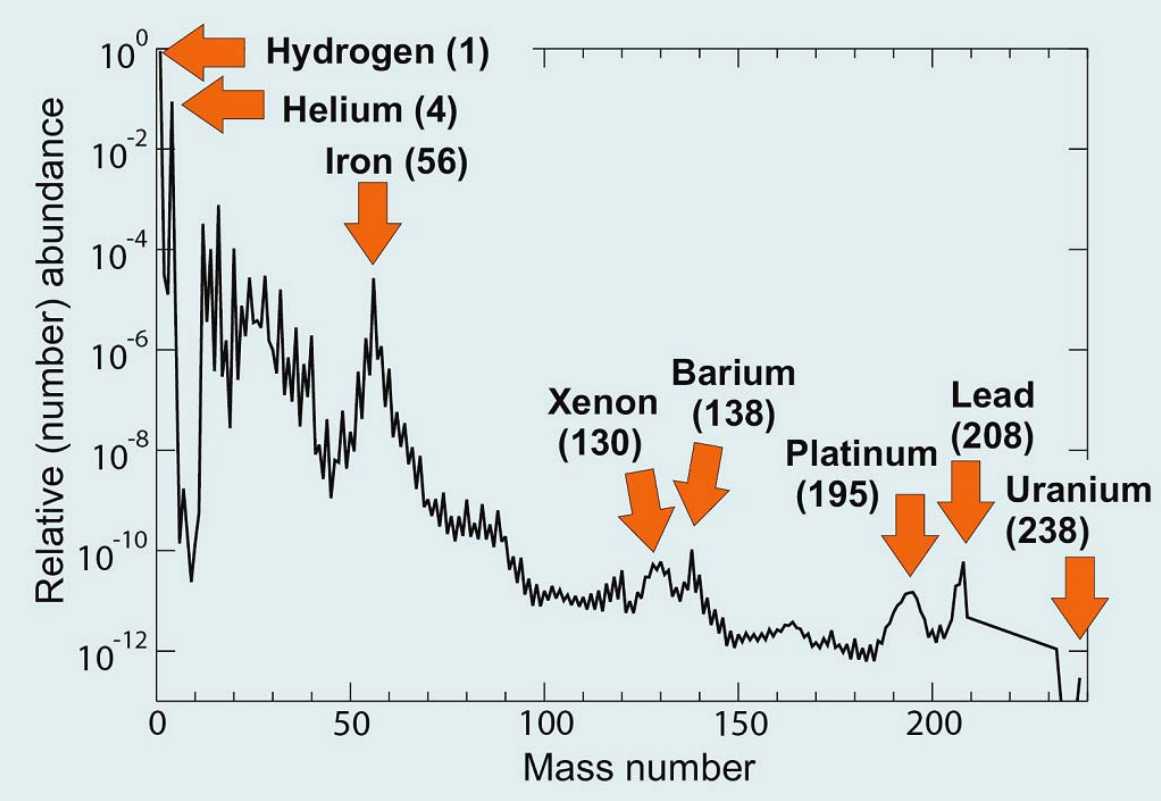

Questions addressed:

- Why is iron so much more abundant than heavier elements such as gold?
- Why are there heavy elements at all and how did they come into existence?
- How can we explain the isotopic composition in the Universe?

H. Schatz et al., Europhys. News 37, 16 (2006).

Neutron capture processes

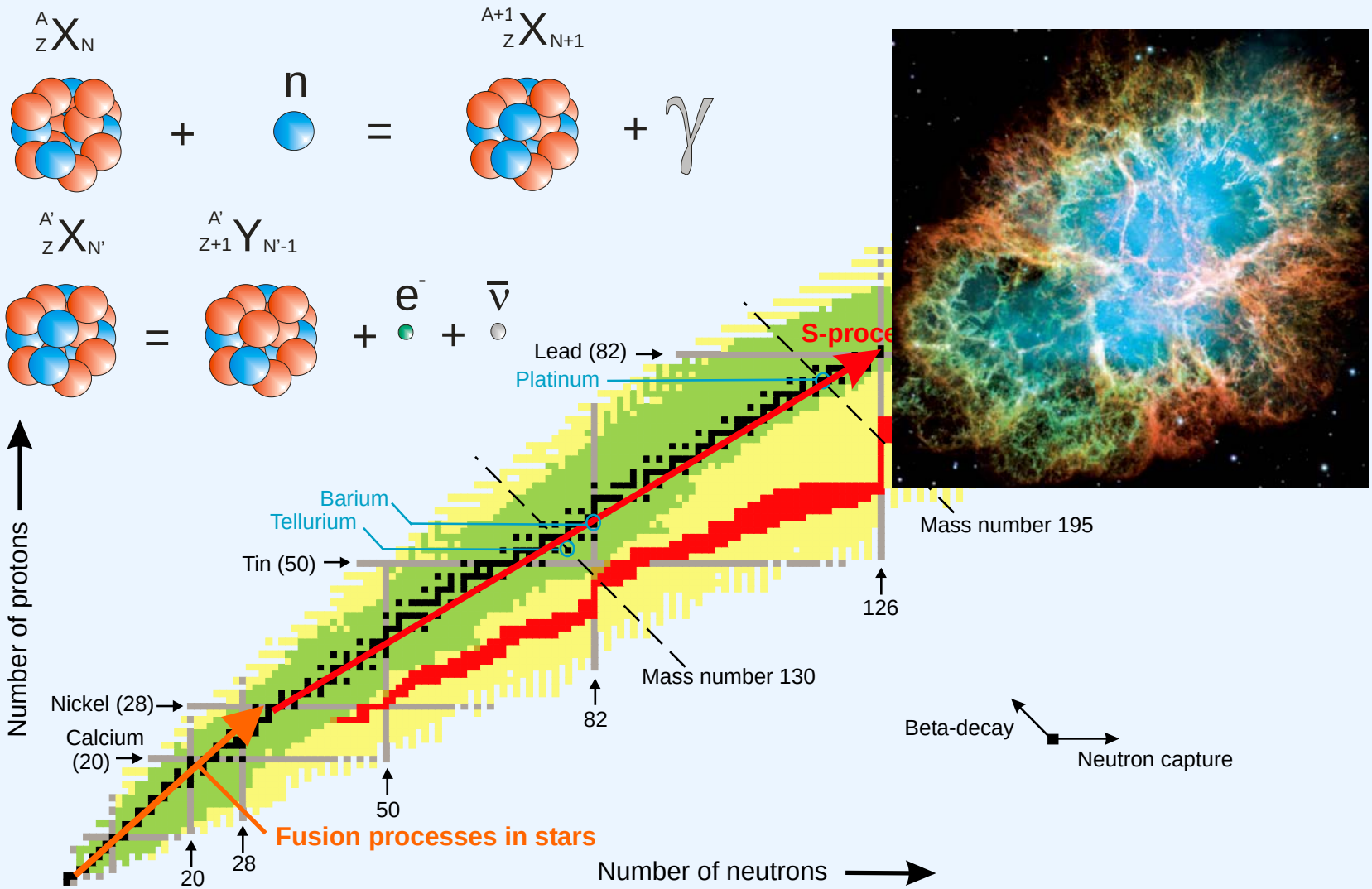

K. Blaum et al., Physik Journal 5 (2006) Nr. 2.

H. Schatz et al., Europhys. News 37, 16 (2006).

Heavy ions from the Mainz TRIGA reactor

examples of

available elements

H																	He
Li	Be											B	C	N	O	F	Ne
Na	Mg											Al	Si	P	S	Cl	Ar
K	Ca	Sc	Ti	V	Cr	Mn	Fe	Co	Ni	Cu	Zn	Ga	Ge	As	Se	Br	Kr
Rb	Sr	Y	Zr	Nb	Mo	Tc	Ru	Rh	Pd	Ag	Cd	In	Sn	Sb	Te	I	Xe
Cs	Ba		Hf	Ta	W	Re	Os	Ir	Pt	Au	Hg	Tl	Pb	Bi	Po	At	Rn
Fr	Ra		Rf	Db	Sg	Bh	Hs	Mt	Ds	Rg	112						

La	Ce	Pr	Nd	Pm	Sm	Eu	Gd	Tb	Dy	Ho	Er	Tm	Yb	Lu
Ac	Th	Pa	U	Np	Pu	Am	Cm	Bk	Cf	Es	Fm	Md	No	Lr

Neutron flux for sample irradiation:

$0.7 \cdot 10^{12}$ cm^{-2} s^{-1}

$1.75 \cdot 10^{15}$ cm^{-2} s^{-1} (pulsed)

Klaus Eberhardt, Gabriele Hampel, Norbert Trautmann

JOHANNES GUTENBERG UNIVERSITÄT MAINZ

Institut für Kernchemie

Heavy and superheavy ions from SHIP

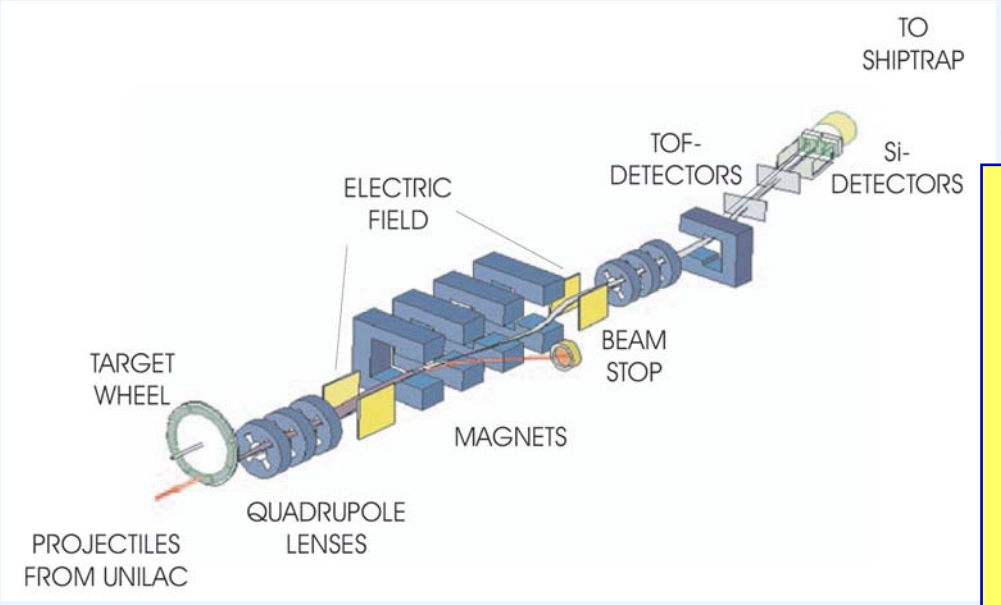

example candidate

$^{254}_{102}\mathrm{No}$

$T_{1/2} = 55\mathrm{s}$

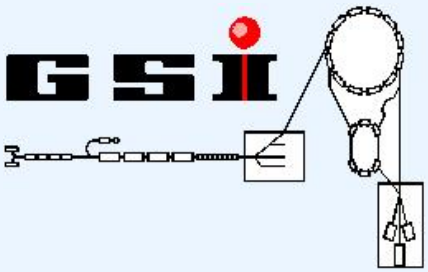

→ comparably large production yield
(~ 2 ions per second)

→ close to predicted “island of stability”

R.D. Herzberg, J. Phys. G 30 (2004).

Penning trap principles

Radial confinement by a homogeneous magnetic field +

axial confinement by a quadrupolar electric field

↓

3 eigenmotions (ν_+, ν_z, ν_-)

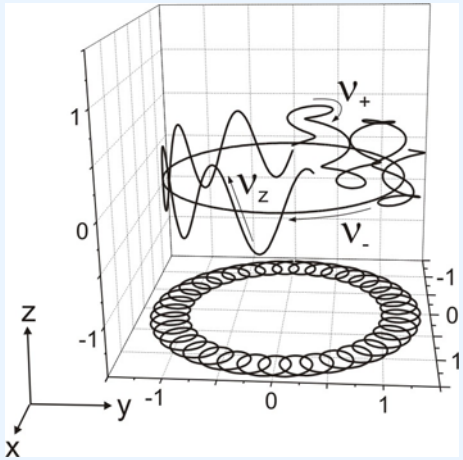

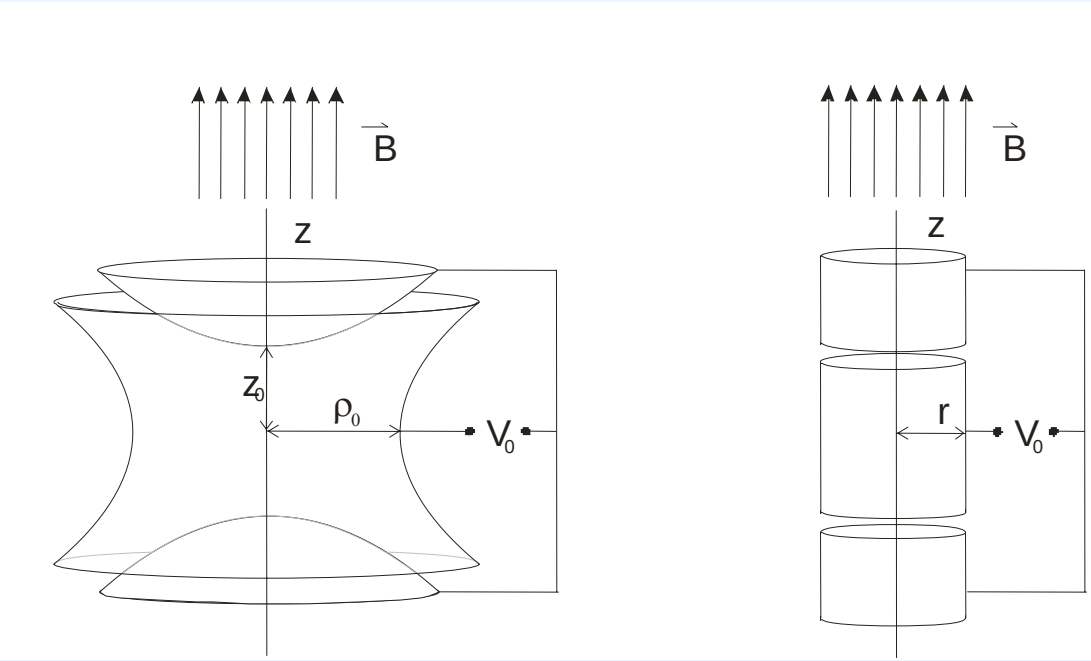

cyclotron frequency

$$\nu_c = \frac{1}{2\pi}\frac{q}{m}B$$

$$\nu_c^2 = \nu_+^2 + \nu_z^2 + \nu_-^2$$

Mass measurements via image current detection

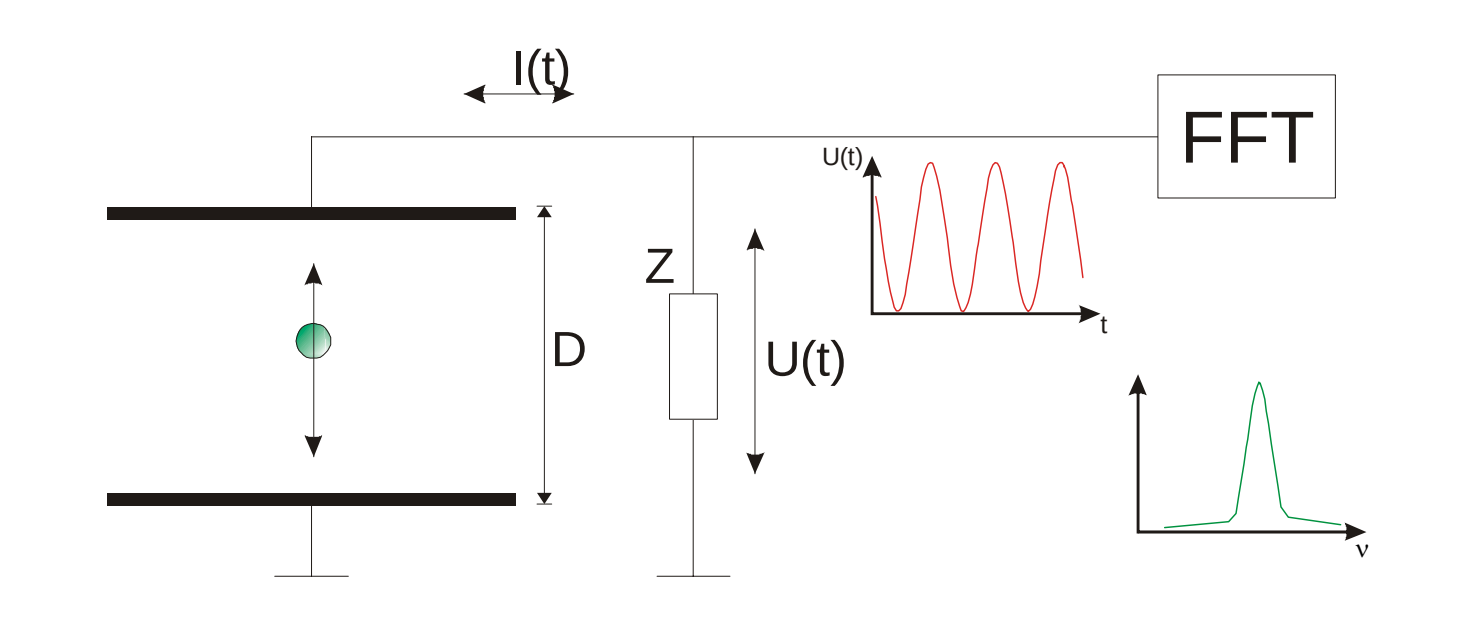

- ions induce an image current in two opposing trap electrodes (e.g. segments of the ring)

$$I(t) = 2\pi \frac{q\nu_{ion} r_{ion}(t)}{D} \sim 0.1\text{pA}$$

- Voltage drop across a resistor is Fourier transformed

$$U(t) = |Z| \cdot I(t)$$

- detection of an eigenfrequency

Principle of the narrow-band FT-ICR detection method

to improve signal-to-noise ratio, detection bandwidth $\Delta\nu$ has to be reduced.

↓

frequency-dependent impedance $Z(\nu)$

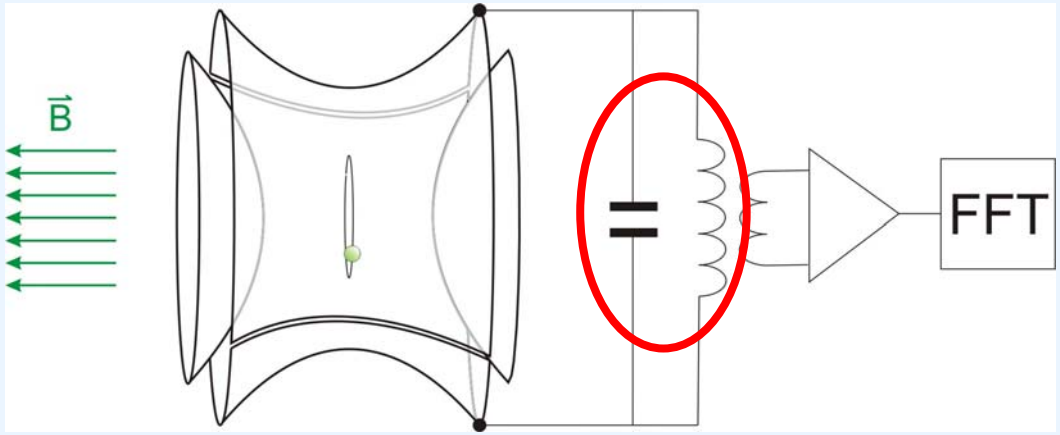

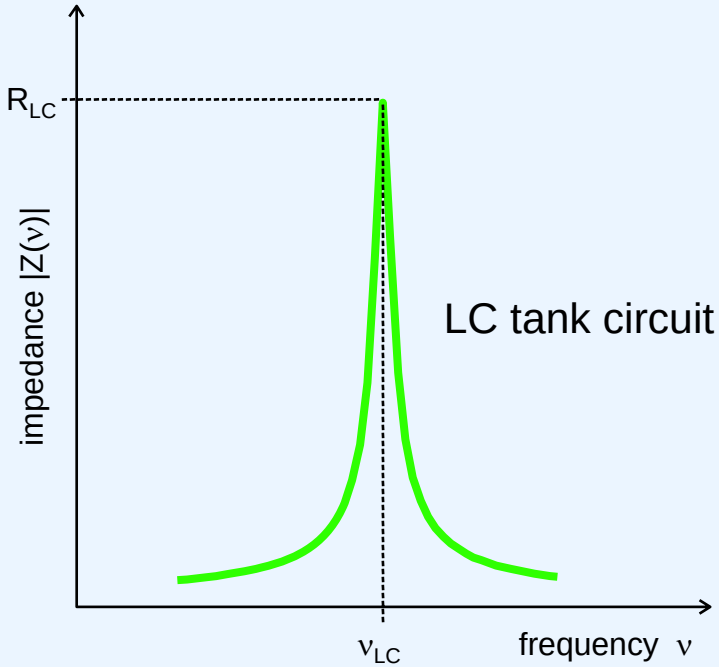

A measure for the bandwidth $\Delta\nu$ of a LC tank circuit is the quality factor *Q*.

$$Q = \frac{\nu_{LC}}{\Delta\nu} = 2\pi \frac{R_{LC}}{\nu_{LC} L}$$

Signal-to-Noise (S/N) ratio

Problem: thermal noise (Johnson noise)

$$U_{noise} = \sqrt{4k_B T |Z| \Delta\nu}$$

Signal-to-Noise ratio

$$\frac{S}{N} = \frac{\sqrt{\pi}}{2} \frac{r_{ion}}{D} q \sqrt{\frac{\nu}{\Delta\nu}} \sqrt{\frac{Q}{k_B T C}}$$

To have a sufficient S/N ratio with single singly charged ions (q=e), the parameters T, Q have to be tuned.

- cool down the system to **cryogenic temperatures**
  (here: trap at **77 K** and first stage of electronics at **4 K**.)

The experimental setup at Mainz

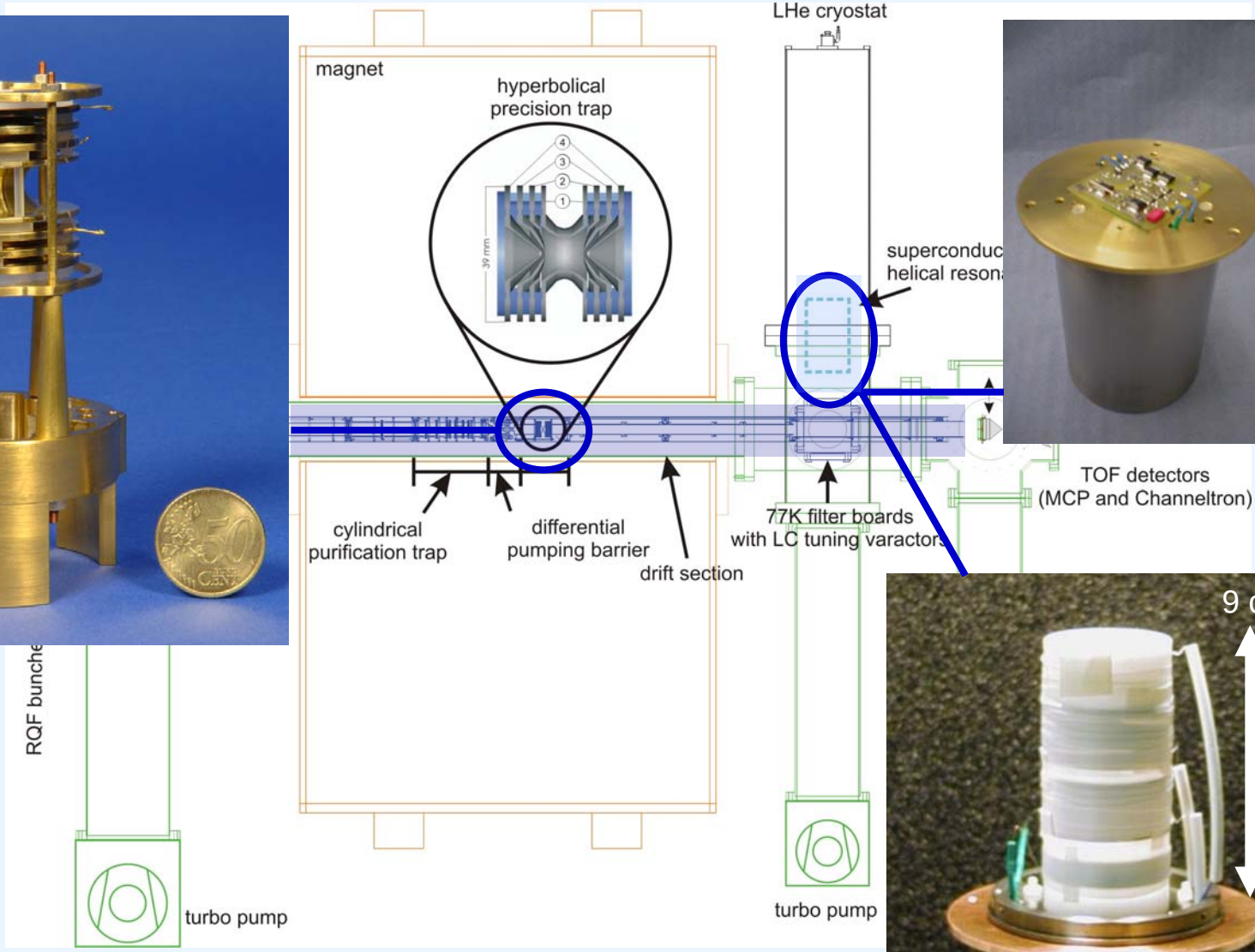

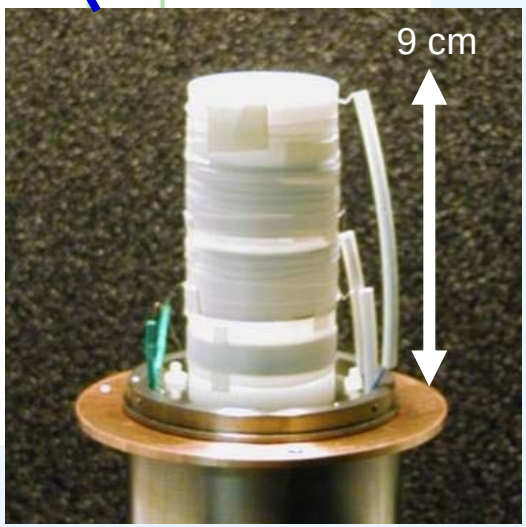

C. Weber, PhD thesis, University of Heidelberg (2004).
C. Weber et al., Eur. Phys. J. A 25, S01, 65 (2005).

Resonance of the superconducting tank circuit

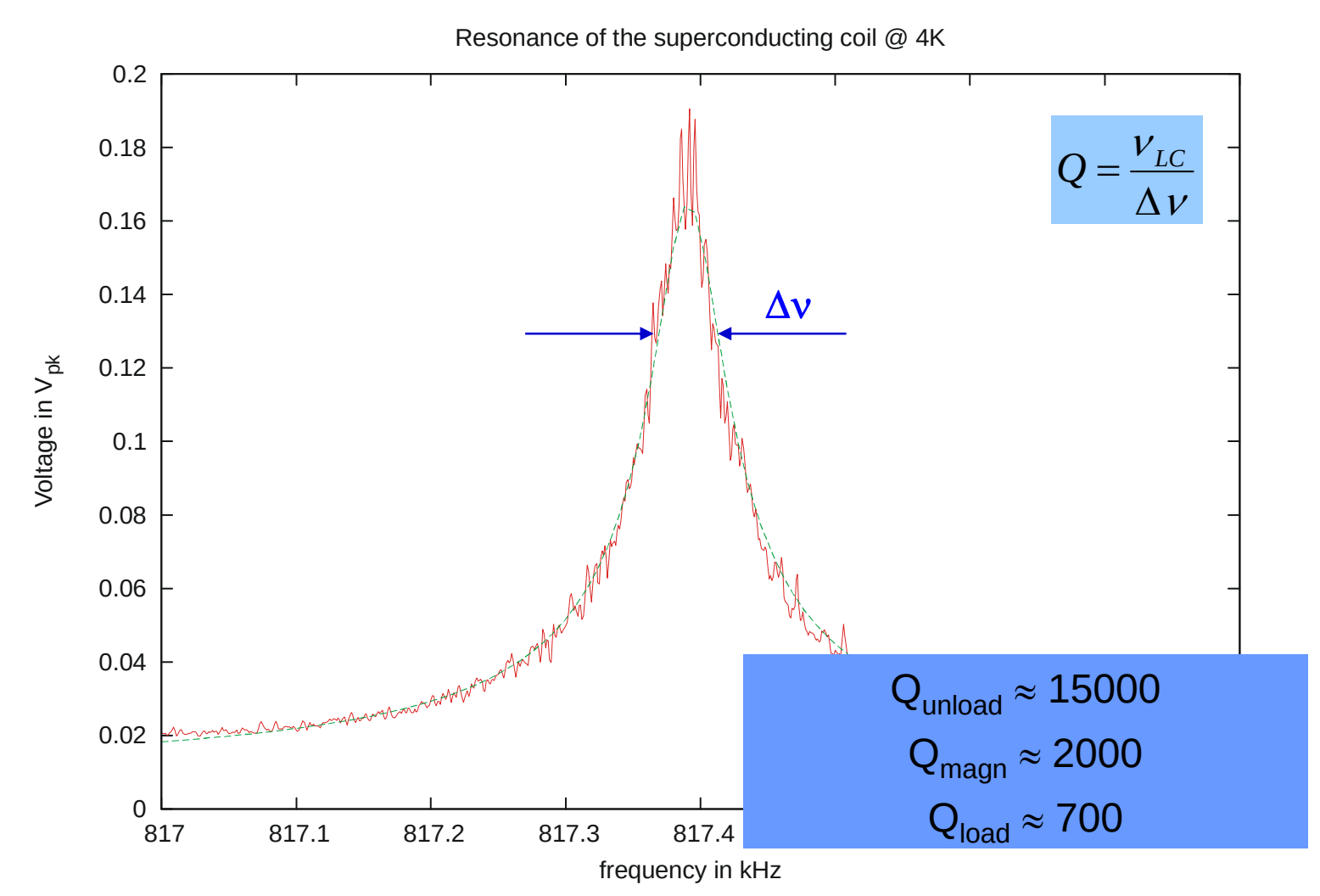

Signal amplification

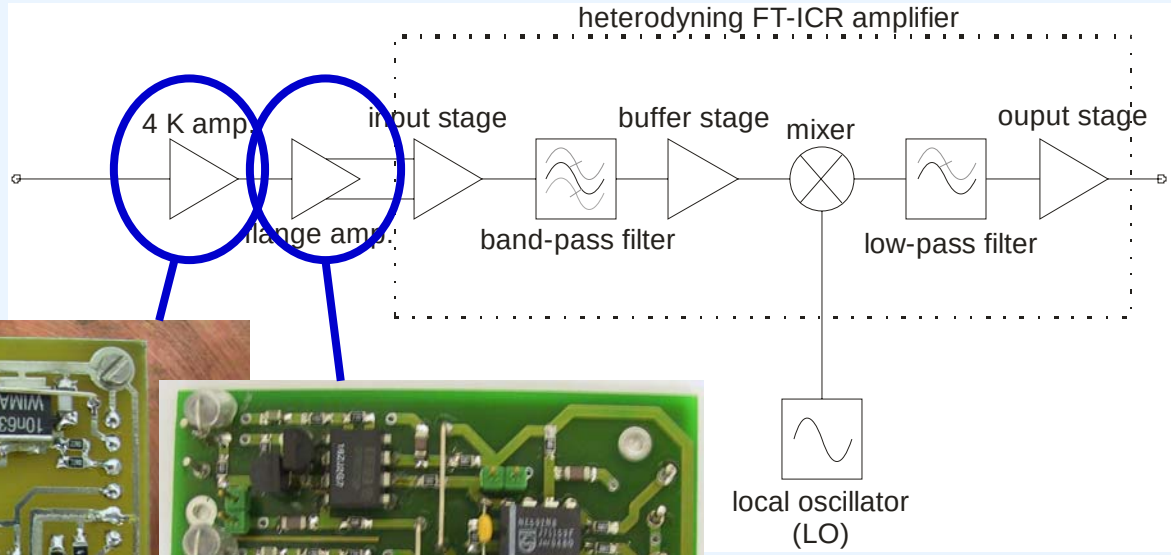

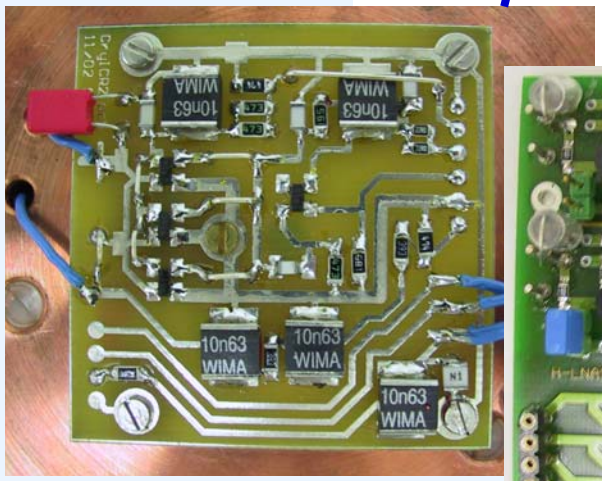

Total amplification

≈ 100 000

Status of the experiment

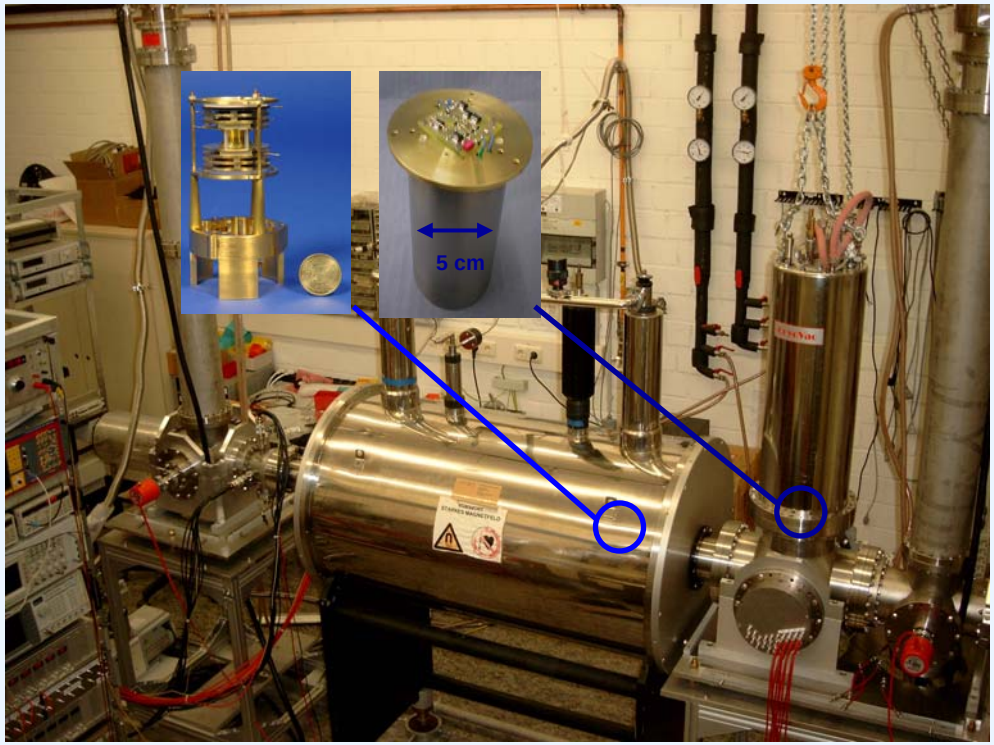

- Setup assembled in a test magnet
- New magnet already delivered
- Ion transport optimization with $^{133}Cs^{1+}$ ions
- ongoing tests to optimize loaded *Q*-value in the magnetic fringe field
- demonstration of single-ion sensitivity with $^{87}Rb^{1+}$ soon

Apparatus will be moved into the new magnet at the Mainz TRIGA reactor for first mass measurements on heavy nuclides.

Superheavy nuclides are available at the SHIP facility at GSI/Darmstadt.

Conclusions

- Heavy and superheavy elements yield only **very low production rates** (~1 / sec.) but **rather long half-lives** (≥1 sec.). Therefore, the **non-destructive FT-ICR detection technique** is ideally suited.
- For **single-ion detection**, the well-known FT-ICR technique has to be modified. A broad-band method is not applicable here.
- The use of the **cryogenic narrow-band FT-ICR technique** combined with a **77 K cold trap** enables single-ion sensitivity.
- We are able to design a **resonator** with sufficiently **high *Q*-value**, but there is still space for improvements concerning other limiting factors (trap connection wires, shielding of the magnetic field).

Thanks a lot for your attention!

MATS group within QUANTUM at the institute of physics

at

JOHANNES GUTENBERG UNIVERSITÄT MAINZ

Klaus Blaum, Michael Dworschak, Georg Eitel, Sebastian George, Rafael Ferrer, Jens Ketelaer, Susanne Kreim, Szilard Nagy, Dennis Neidherr, Julia Repp, Birgit Schabinger, Christian Smorra, Sven Sturm

collaborators: Klaus Eberhardt, Frank Herfurth, Holger Kracke, Stefan Stahl, Stefan Ulmer, Christine Weber

Funding:

HELMHOLTZ GEMEINSCHAFT

VH-NG-037

Deutsche Forschungsgemeinschaft DFG

GSI